REVISIONS				
ZONE	REV.	DESCRIPTION	DATE	APPROVED
	A	PR 348	27-MAY-98	
	B	EC 2173	07-AUG-98	

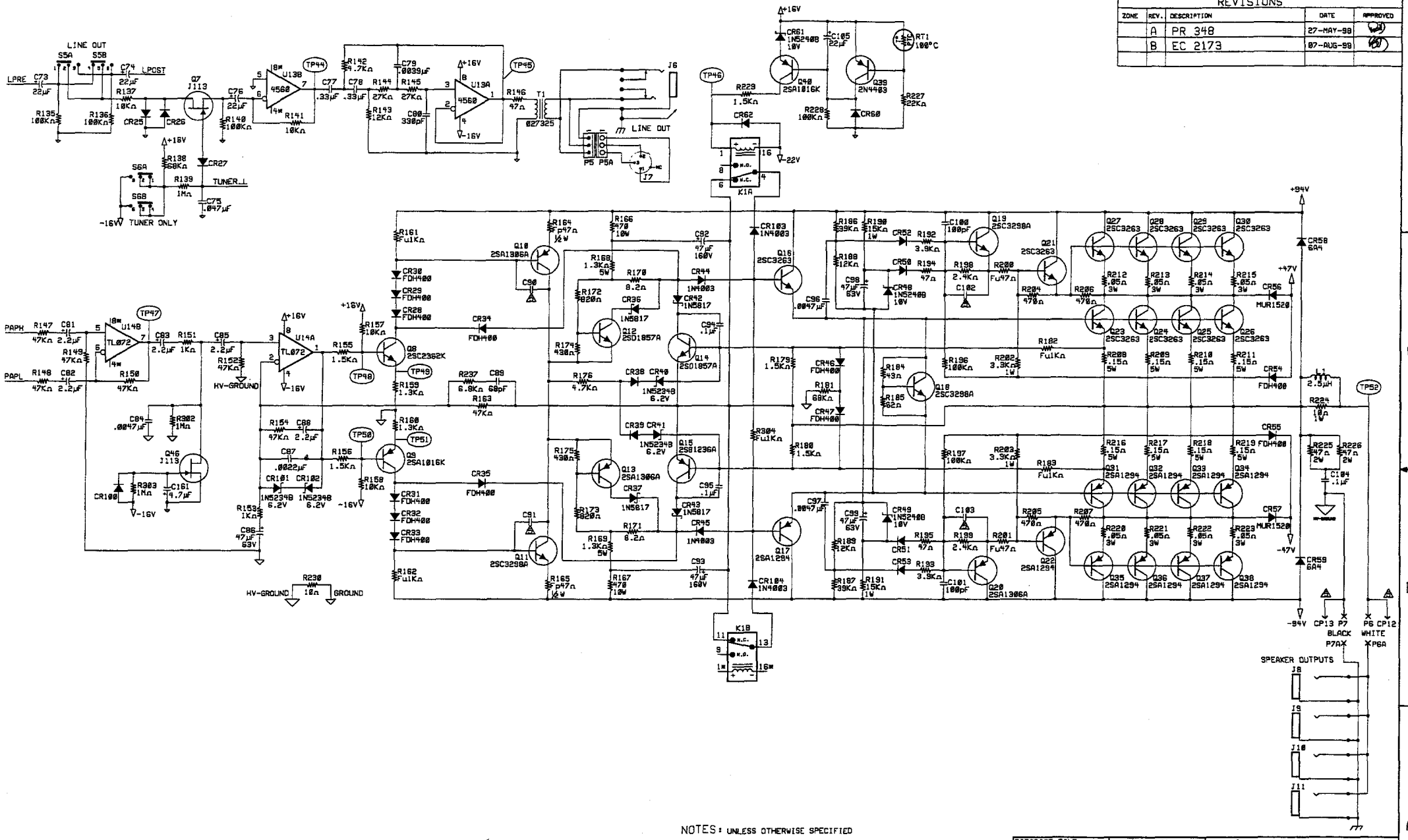

NOTES: UNLESS OTHERWISE SPECIFIED

1. ALL RESISTORS IN OHMS, ¼W, 5%.
2. ALL UNPOLARIZED CAPACITORS IN µF, 50V (MIN.), 10% OR BETTER.
3. ALL POLARIZED CAPACITORS IN µF, 50V (MIN.), 20%.
4. ALL SIGNAL DIODES ARE 1N4448.

⚠ C90-91, C102-103, CP12-13 NOT STUFFED.

DATABASE FILE: 234852.DBF
CHECKED BY: BOB
DATE: 18-AUG-98
APPROVED: [illegible]
DATE: 19 AUG 98

TOLERANCES: UNLESS OTHERWISE NOTED
X.X ±0.050"
X.XX ±0.010"
X.XXX ±0.005"
ANGLES ±0.500°

PROPRIETARY
THIS DRAWING DOCUMENT CONTAINS INFORMATION WHICH IS PROPRIETARY TO AND IS THE PROPERTY OF THE FENDER MUSICAL INSTRUMENTS CO. AND MAY NOT BE USED, REPRODUCED OR DISCLOSED IN ANY MANNER WITHOUT THE EXPRESSED WRITTEN CONSENT FROM:
FENDER MUSICAL INSTRUMENTS CO.
NATIONAL HEADQUARTERS
2821 RESEARCH DRIVE
CORONA, CA 91720 USA

NEXT HIGHER ASSEMBLY:

FENDER MUSICAL INSTRUMENTS
2821 Research Drive
Corona, CA 91720 USA

TITLE: SERVICE DIAGRAM, COMB. (schematic)
SUNN 1200S BASS AMPLIFIER

SIZE	DRAWN: DERI/HUGHES	DRAWING NUMBER	REV.
D	ENGR: HUGHES	0053905000	B
SCALE:	CREATED: 11-FEB-97 PLOTTED: 18-AUG-98	SHEET 2 OF 4	