SCHEMATIC DAIAGRAM NATIONAL MODEL SA-52H

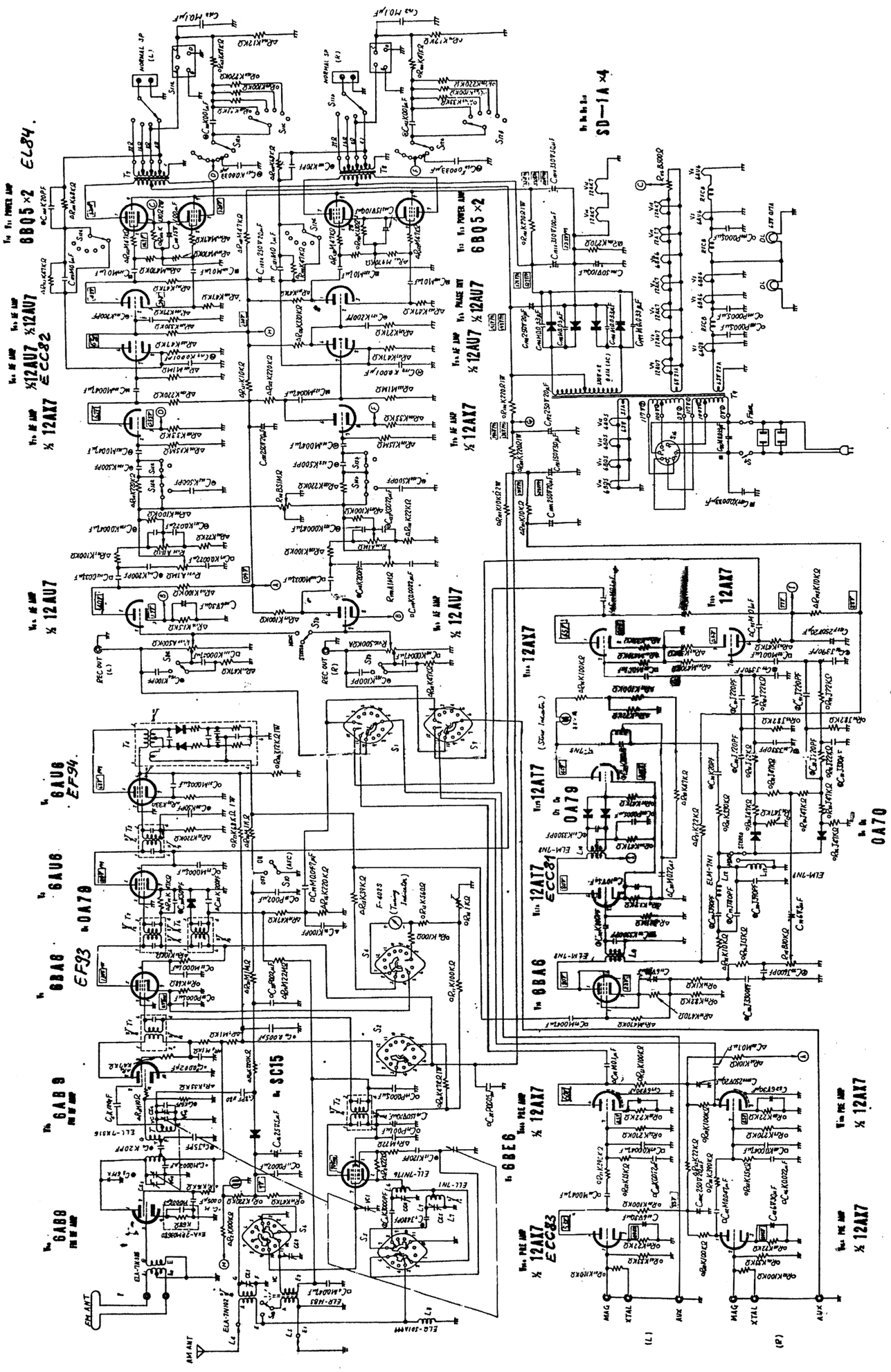

$S_1 \sim S_6$ .....SELECT switch, shown at "AUX" position; can be set also to PH, FM, MW and SW in that order.

S_7 .....MODE switch, shown at "STEREO" position.

S_8 .....LOUDNESS switch, shown at "OFF" position.

S_9 .....POWER switch, shown at "OFF" position.

S_{10} .....FM AFC switch, shown at "OFF" position.

S_{11} .....IMPEDANCE change switch, shown at "ON" position.

S_{12} .....MFB switch, shown at "OFF" position.

S_{13} .....DX-LOCAL switch at the rear of the set, shown at "LOCAL" position.

S_{14} .....HIGH FILTER switch, shown at "OFF" position.

S_{15} .....LOW FILTER switch, shown at "OFF" position.

S_{16} .....VOLT SELECT socket. Insert the appropriate plug here, according to your power source voltage. (plugs for various voltages are in the polyethylane parts bag).

△ Solid resistor
○ Carbon resistor
⊠ Resin-coated resistor
◎ Ceramic capacitor
○ Hi-K ceramic capacitor
Ⓜ Polyester capacitor
Ⓢ Polystyrene capacitor
▲ Mica capacitor
● Temperature compensation capacitor
□ ECN-R type paper capacitor
⊠ ECN-B type paper capacitor
△ ECH-R type paper capacitor

MATSUSHITA ELECTRIC INDUSTRIAL CO. LTD.

Kadoma, Osaka, Japan